Lynch
Manifolds & Valve Packs

# D07 Subplate with Relief - Nominal 3/4”

BAR MANIFOLDS
TAPPING PLATES
VALVE ADAPTERS
SUBPLATES
SUBPLATES w/ CIRCUITS
COVER PLATES
HEADERS/ JUNCTIONS
DIN BODIES
ACCESSORIES ELECTRONICS
VALVE PACKS & CUSTOMS
TECHNICAL INFO

**SPRP_07GSPSFUEE**

(See Page 5.99.01 for Relief Cartridges)

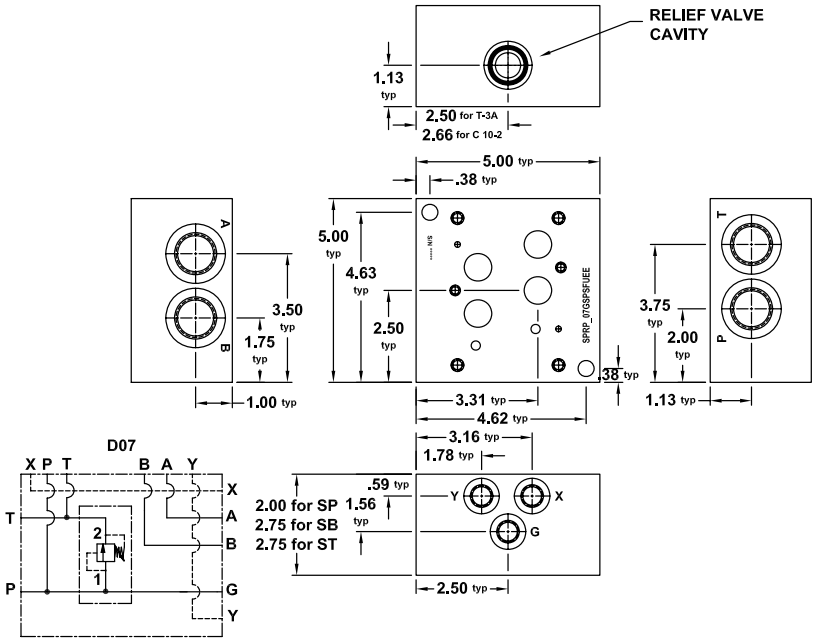


Mounting Kits include the following:

"SP" UNC Kit:
2 - 3/8"-16 x 2.75" SHCS
"SP" Metric Kit:
2- M10-1.5 x 70 mm SHCS

"SB" UNC Kit:
2 - 3/8"-16 x 3.50" SHCS
2 - plugs
"SB" Metric Kit:
2- M10-1.5 x 90 mm SHCS
2 - plugs

"ST" UNC Kit:
2 - 3/8"-16 x 3.50" SHCS
"ST" Metric Kit:
2- M10-1.5 x 90 mm SHCS

**SPRP_07GSBSFUEE - BOTTOM VIEW**

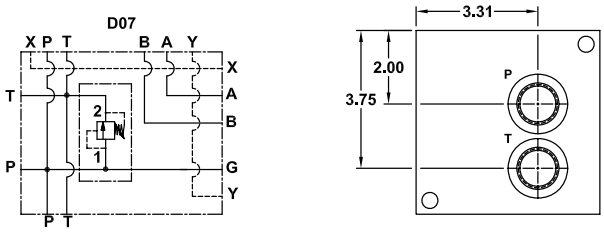


**SPRP_07GSTSFUEE - BOTTOM VIEW**

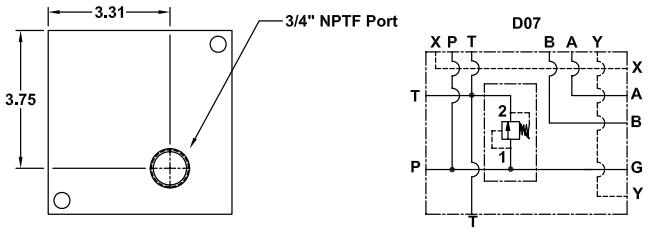


## PART NUMBER SYSTEM

Aluminum D07 Side Ported Subplate with SAE 12 Ports & T-3A Relief Example: **SPRPA07GSPSFUEE**

| TYPE | MATERIAL | VALVE PATTERN | PORTING STYLE | PORT CODE | MOUNTING THREADS & KIT | RELIEF CAVITY AND PILOT PORT OPTIONS |
|---|---|---|---|---|---|---|

| | |
|---|---|
| SPRP | Subplates with P to T Relief |

| | |
|---|---|
| A | Aluminum |
| D | Ductile Iron |

| | |
|---|---|
| 07G | ISO 4401-07-06 NFPA T3.5.1-D07 |

| | |
|---|---|
| SB | Side Ported with Bottom P & T Ports |
| SP | Side Ported only |
| ST | Side Ported with 3/4" NPTF "T" Port on Bottom only |

| | | | |
|---|---|---|---|
| U | UNC Std for SAE & NPT | D07 Valve | 3/8"-16 UNC x 1.00" dp<br>1/4"-20 UNC x 0.75" dp |
| | | Subplate | 3/8"-16 UNC SHCS |
| M | Metric Std for BSP* & Metric | D07 Valve | M10 x 1.50 x 1.00" dp<br>M6 x 1.00 x .75" dp |
| | | Subplate | M10 x 1.50 SHCS |

| CODE | TYPE | P, T, A and B | X & Y | G |
|---|---|---|---|---|
| SF | SAE | 12 | 6 | 6 |
| NF | NPTF | 3/4" | 1/4" | 1/4" |
| BF | BSPP | 3/4" | 1/4" | 1/4" |
| TF | BSPT | 3/4" | 1/4" | 1/4" |
| MF | METRIC | M27 | M10 | M10 |

| | |
|---|---|
| DE | Common C10-2 |
| EE | Sun T-3A |

WE RESERVE THE RIGHT TO DISCONTINUE MODELS, OR CHANGE SPECIFICATIONS WITHOUT NOTICE OR INCURRING OBLIGATION