D05H(E) High Flow Subplate w/Relief - Nominal 1”

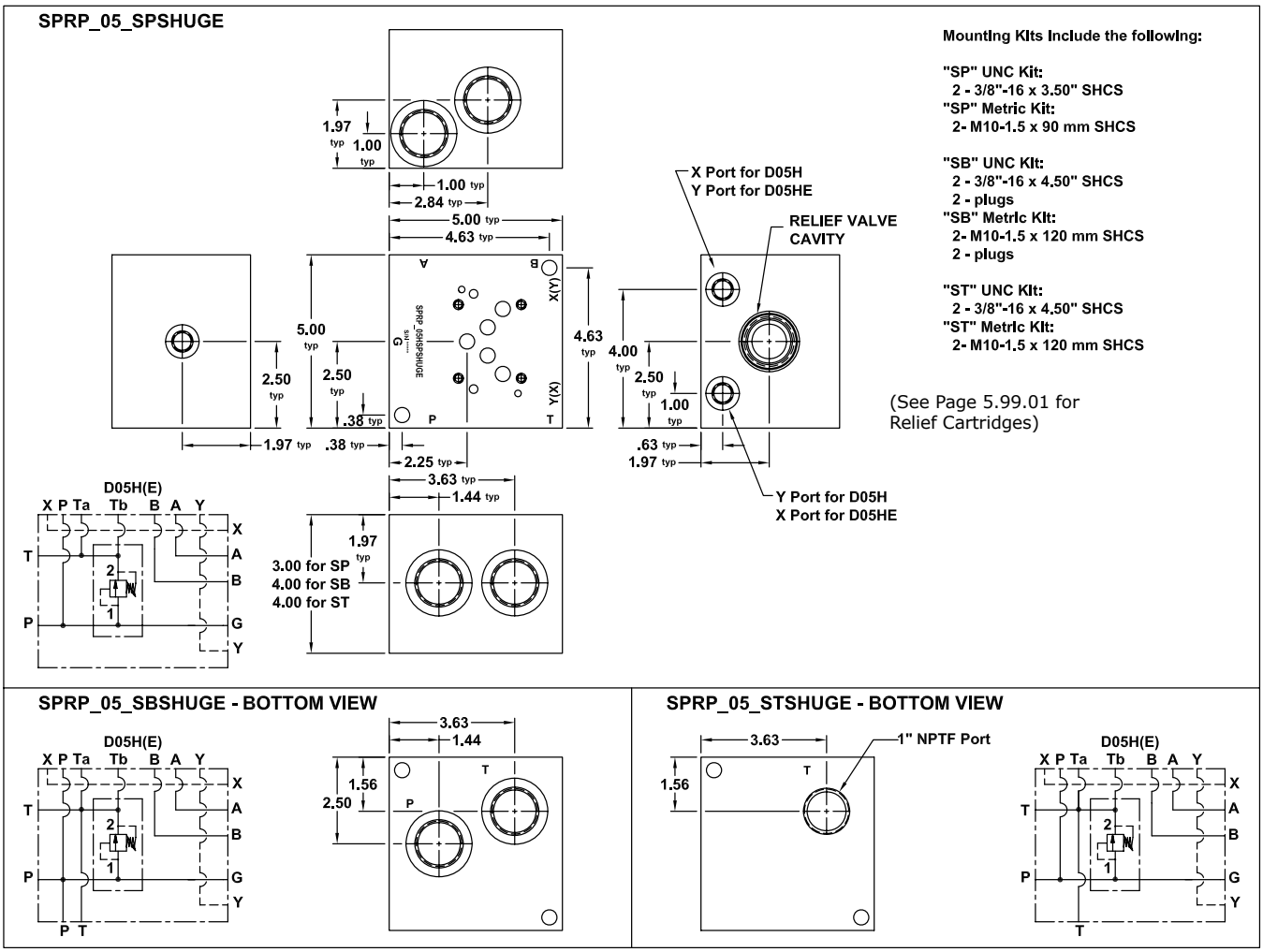

PART NUMBER SYSTEM

Aluminum D05H Side Ported Subplate with SAE 16 Ports & T-16A Relief Example: **SPRPA05HSPSHUGE**

TYPE	MATERIAL	VALVE PATTERN	PORTING STYLE	PORT CODE	MOUNTING THREADS & KIT	RELIEF CAVITY AND PILOT PORT OPTIONS

SPRP	Subplates with P to T Relief

A	Aluminum
D	Ductile Iron

05H	(USA Standard) NFPA T3.5.1-D05 Alt B
05E	ISO 4401-05-05 (EURO) NFPA T3.5.1-D05 Alt A

SB	Side Ported with Bottom P & T Ports
SP	Side Ported only
ST	Side Ported with 1" NPTF "T" Port on Bottom only

U	UNC Std for SAE & NPT	D05 Valve Subplate	1/4"-20 UNC x 0.75" dp
			3/8"-16 SHCS
M	Metric Std for BSP* & Metric	D05 Valve Subplate	M6 x 1.00 x .75" dp
			M10 x 1.50 SHCS

CODE	TYPE	P, T, A and B	X & Y	G
SH	SAE	16	6	6
NH	NPTF	1"	1/4"	1/4"
BH	BSPP	1"	1/4"	1/4"
TH	BSPT	1"	1/4"	1/4"
MH	METRIC	M33	M10	M10

GE	Sun T-16A
HE	Common C16-2

NOTE: As a Non-Standard Option, Subplates with no Pilot Ports can be ordered by using "05T" for Valve Pattern Code and replacing the "E" at the end of the Part Number with an "A". An Example Part Number would be: SPRPA**05T**SPSHUG**A**

WE RESERVE THE RIGHT TO DISCONTINUE MODELS, OR CHANGE SPECIFICATIONS WITHOUT NOTICE OR INCURRING OBLIGATION