D05 Standard Flow Series Circuit Manifold

(See Page 1.99.01 for Relief Cartridges)

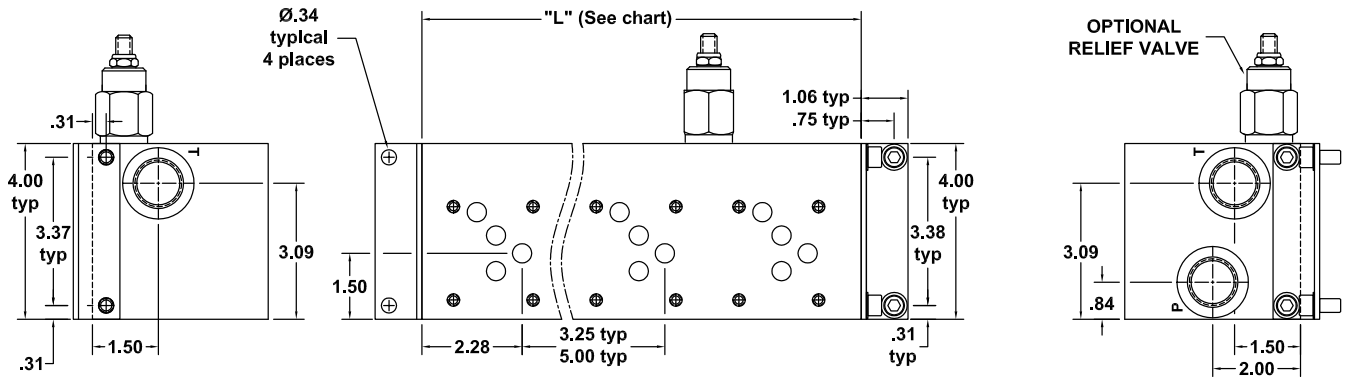

UNC Mounting KIT includes:
- 8 -5/16"-18 x .625" SHCS
- 8 -ITL Washers
- 2 -Brackets

Metric Mounting KIT includes:
- 8 -M8 x 1.25 x 16 mm SHCS
- 8 -ITL Washers
- 2 -Brackets

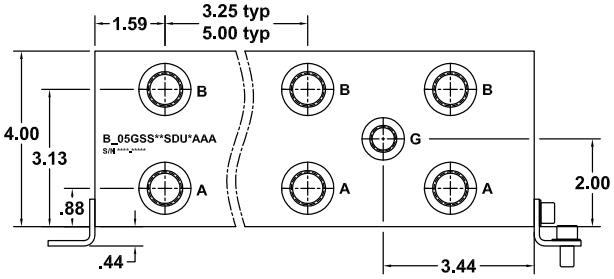

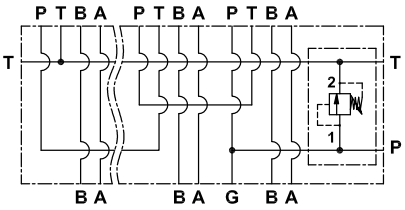

SERIES CIRCUIT WITH
OPTIONAL RELIEF VALVE SHOWN

No. of Stations	2	3	4	5	6
Dim. "L",3.25" spacing	6.75	10.00	13.25	16.50	19.75
est. weight in lb.- alum	10	15	20	25	29
est. weight in lb.- iron	27	40	52	65	78
Dim. "L",5.00" spacing	8.50	13.50	18.50	23.50	28.50
est. weight in lb.- alum	13	20	27	35	42
est. weight in lb.- iron	34	53	73	92	112

SHADED AREA AVAILABLE
ON SPECIAL ORDER ONLY

NOTES:
1) FOR PILOT PORT OPTIONS SEE D05 BAR MANIFOLD ADAPTER SHEETS ON PAGES 1.03.11 & 1.03.12
2) SPECIAL VERSION WITH ALL SAE 12 PORTS IS AVAILABLE WITH SAME DIMENSIONS BY USING PORT CODE "SF"
3) P-T MAIN SYSTEM RELIEF AVAILABLE AS A STANDARD OPTION

PART NUMBER SYSTEM

Aluminum D05 with 3.25" spacing and SAE porting example: **BA05GSS**SDUAAAA**

TYPE	MATERIAL	VALVE PATTERN	CIRCUIT, CAPACITY & SPACING	Std. NO. of STATIONS	PORT CODE	MOUNTING THREADS & KIT	RELIEF CAVITY

B	Bar Manifold

A	Aluminum
D	Ductile Iron

05G	ISO 4401-05-04 NFPA T3.5.1-D05

SS	Series circuit Standard Flow 3.25" Std. Spacing
ST	Series circuit Standard Flow 5.00" Wide Spacing

02 to 04

CODE	TYPE	P & T	A & B	G
SD	SAE	12	8	6
ND	NPTF	3/4"	1/2"	1/4"
BD	BSPP	3/4"	1/2"	1/4"
TD	BSPT	3/4"	1/2"	1/4"
MD	METRIC	M27	M18	M10

U	UNC Std for SAE & NPT	D05 Valve Manifold	1/4"-20 UNC x .75 dp 5/16"-18 UNC x .47 dp
M	Metric Std for BSP* & Metric	D05 Valve Manifold	M6 x 1.00 x .75 dp M8 x 1.25 x .47 dp

AAAA	None
EAAA	Sun T-3A
DAAA	Common C10-2

WE RESERVE THE RIGHT TO DISCONTINUE MODELS, OR CHANGE SPECIFICATIONS WITHOUT NOTICE OR INCURRING OBLIGATION