D03 Very High Flow Parallel Circuit with Flange Ports

(See Page 1.99.01 for Relief Cartridges)

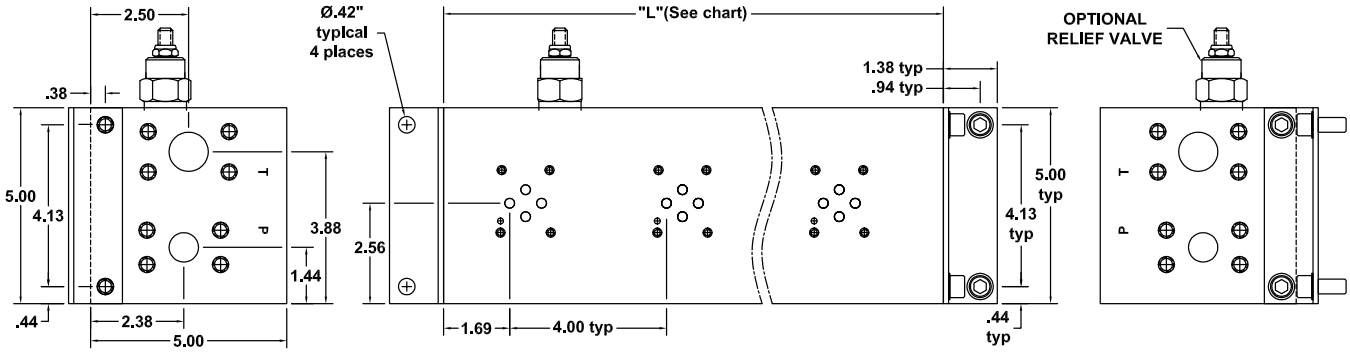

UNC Mounting KIT Includes:
- 8 -3/8"-16 x .875" SHCS
- 8 -ITL Washers
- 2 -Brackets

Metric Mounting KIT Includes:
- 8 -M10 x 1.50 x 20 mm SHCS
- 8 -ITL Washers
- 2 -Brackets

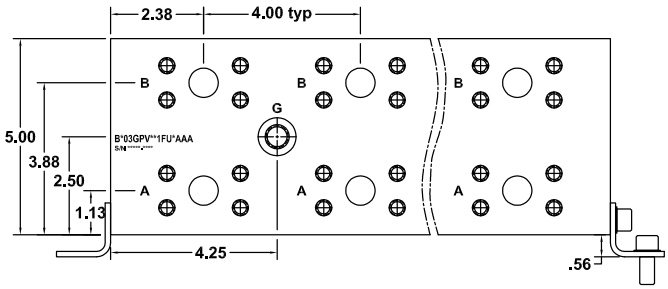

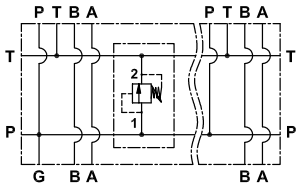

PARALLEL CIRCUIT WITH OPTIONAL RELIEF VALVE SHOWN

No. of Stations	1*	1**	2	3	4	5	6	7	8	9
Dim. "L",4.00" spacing	4.75	5.50	8.75	12.75	16.75	20.75	24.75	28.75	32.75	36.75
est. weight in lb.- alum	11	14	20	29	38	47	56	65	74	83
est. weight in lb.- iron	28	38	52	76	101	125	149	174	198	222

** DIMENSIONS FOR 1 STATION WITH C10-2 RELIEF CAVITY
* DIMENSIONS FOR 1 STATION WITH T-3A RELIEF CAVITY

SHADED AREA AVAILABLE ON SPECIAL ORDER ONLY

PART NUMBER SYSTEM

Aluminum D03 with 4.00" Spacing & UNC Mounting example: **BA03GPV**1FUAAAA**

TYPE	MATERIAL	VALVE PATTERN	CIRCUIT, CAPACITY & SPACING	Std. NO. of STATIONS	PORT CODE	MOUNTING THREADS & KIT	RELIEF CAVITY

B	Bar Manifold

A	Aluminum
D	Ductile Iron

03G	ISO 4401-03-02 NFPA T3.5.1-D03

PV	Parallel circuit Very High Flow 4.00" Std. Spacing

01 to 08

U	UNC Std with SAE 6 Gauge	D03 Valve Manifold	10-24 UNC x .63" dp
			3/8"-16 UNC x 0.75" dp
M	Metric Std with M10 Gauge	D03 Valve Manifold	M5 x 0.80 x .63" dp
			M10 x 1.50 x 0.75" dp

CODE	TYPE	T	P A & B	G*
1F	SAE CODE 61	1"	3/4"	6
				M10

* Gauge Port determined by Mounting Threads

AAAA	None
EAAA	Sun T-3A
HAAA	Common C16-2

WE RESERVE THE RIGHT TO DISCONTINUE MODELS, OR CHANGE SPECIFICATIONS WITHOUT NOTICE OR INCURRING OBLIGATION