Lynch
Manifolds & Valve Packs

D03 High Flow Parallel Circuit Manifold

(See Page 1.99.01 for Relief Cartridges)

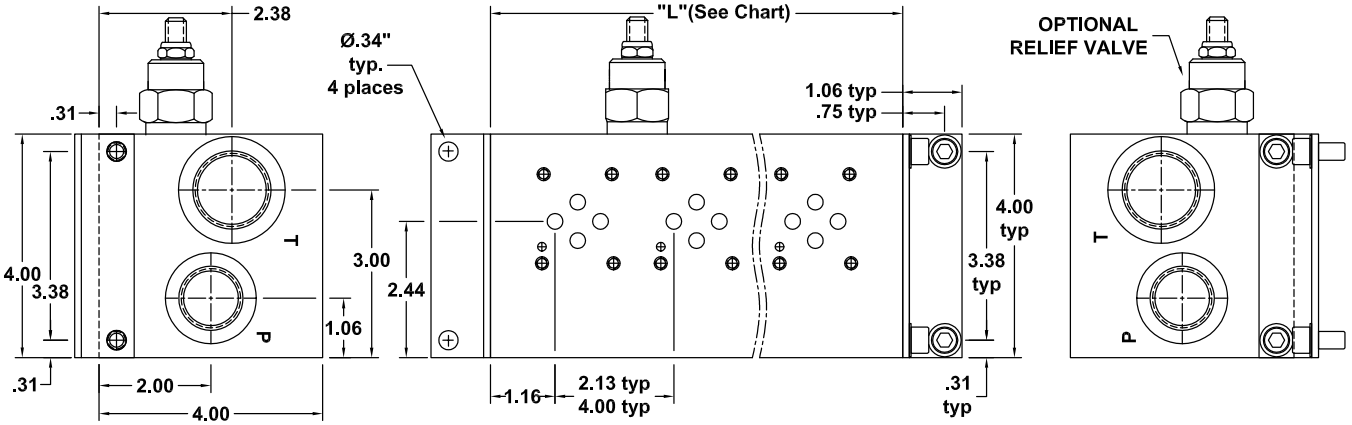

UNC Mounting KIT includes:
- 8 -5/16"-18 x .625"SHCS
- 8 -ITL Washers
- 2 -Brackets

Metric Mounting KIT includes:
- 8 -M8x1.25 x 16mm SHCS
- 8 -ITL Washers
- 2 -Brackets

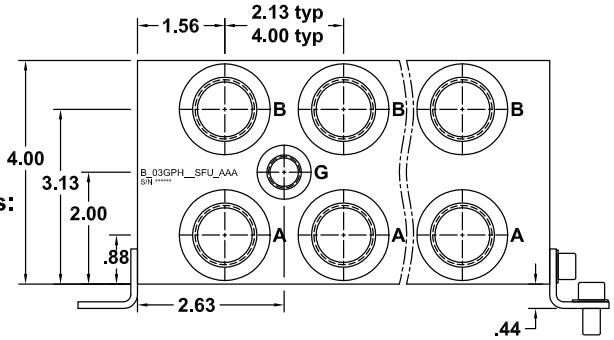

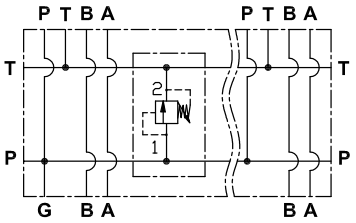

PARALLEL CIRCUIT WITH
OPTIONAL RELIEF VALVE SHOWN

No. of Stations	1	1*	2	3	4	5	6	7	8	9	10	11	12	13	14	15	16
Dim. "L",2.13" spacing	3.13	4.25	5.25	7.38	9.50	11.63	13.75	15.88	18.00	20.13	22.25	24.38	26.50	28.63	30.75	32.88	35.00
est. weight in lb.- alum	5	7	8	11	14	17	21	24	27	30	33	36	39	42	45	48	51
est. weight in lb.- iron	13	17	21	29	38	46	54	62	71	79	87	96	104	112	120	129	137
Dim. "L",4.00" spacing	-	-	7.13	11.13	15.13	19.13	23.13	27.13	31.13	35.13	39.13	-	-	-	-	-	-
est. weight in lb.- alum	-	-	11	17	23	28	34	40	46	51	57	-	-	-	-	-	-
est. weight in lb.- iron	-	-	28	44	60	75	91	106	122	137	153	-	-	-	-	-	-

* DIMENSIONS FOR 1 STATION WITH RELIEF CAVITY & GAUGE PORT
NO GAUGE PORT SUPPLIED WITH SINGLE STATION MANIFOLD

SHADED AREA AVAILABLE ON SPECIAL ORDER ONLY

PART NUMBER SYSTEM

Aluminum D03 with 2.13" Spacing & SAE Porting example: BA03GPHSFUAAAA**

TYPE	MATERIAL	VALVE PATTERN	CIRCUIT, CAPACITY & SPACING	Std. NO. of STATIONS	PORT CODE	MOUNTING THREADS & KIT	RELIEF CAVITY

B	Bar Manifold

A	Aluminum
D	Ductile Iron

03G	ISO 4401-03-02 NFPA T3.5.1-D03

PH	Parallel circuit High Flow 2.13" Std. Spacing
PI	Parallel circuit High Flow 4.00" Wide Spacing

01 to **10**

U	UNC Std for SAE & NPT	D03 Valve	10-24 UNC x .63" dp
		Manifold	5/16"-18 UNC x .47" dp
M	Metric Std for BSP* & Metric	D03 Valve	M5 x 0.80 x .63" dp
		Manifold	M8 x 1.25 x .47" dp

CODE	TYPE	T	P A & B	G
SF	SAE	16	12	6
NF	NPTF	1"	3/4"	1/4"
BF	BSPP	1"	3/4"	1/4"
TF	BSPT	1"	3/4"	1/4"
MF	METRIC	M33	M27	M10

AAAA	None
EAAA	Sun T-3A
HAAA	Common C16-2

WE RESERVE THE RIGHT TO DISCONTINUE MODELS, OR CHANGE SPECIFICATIONS WITHOUT NOTICE OR INCURRING OBLIGATION

Lynch Products Can Be Modified to Suit Your Application

Phone: 1 (888) 626-4365 or + 1 (905) 363-2400 Fax: 1 (800) 263-5807 or + 1 (905) 363-1191 www.lynch.ca